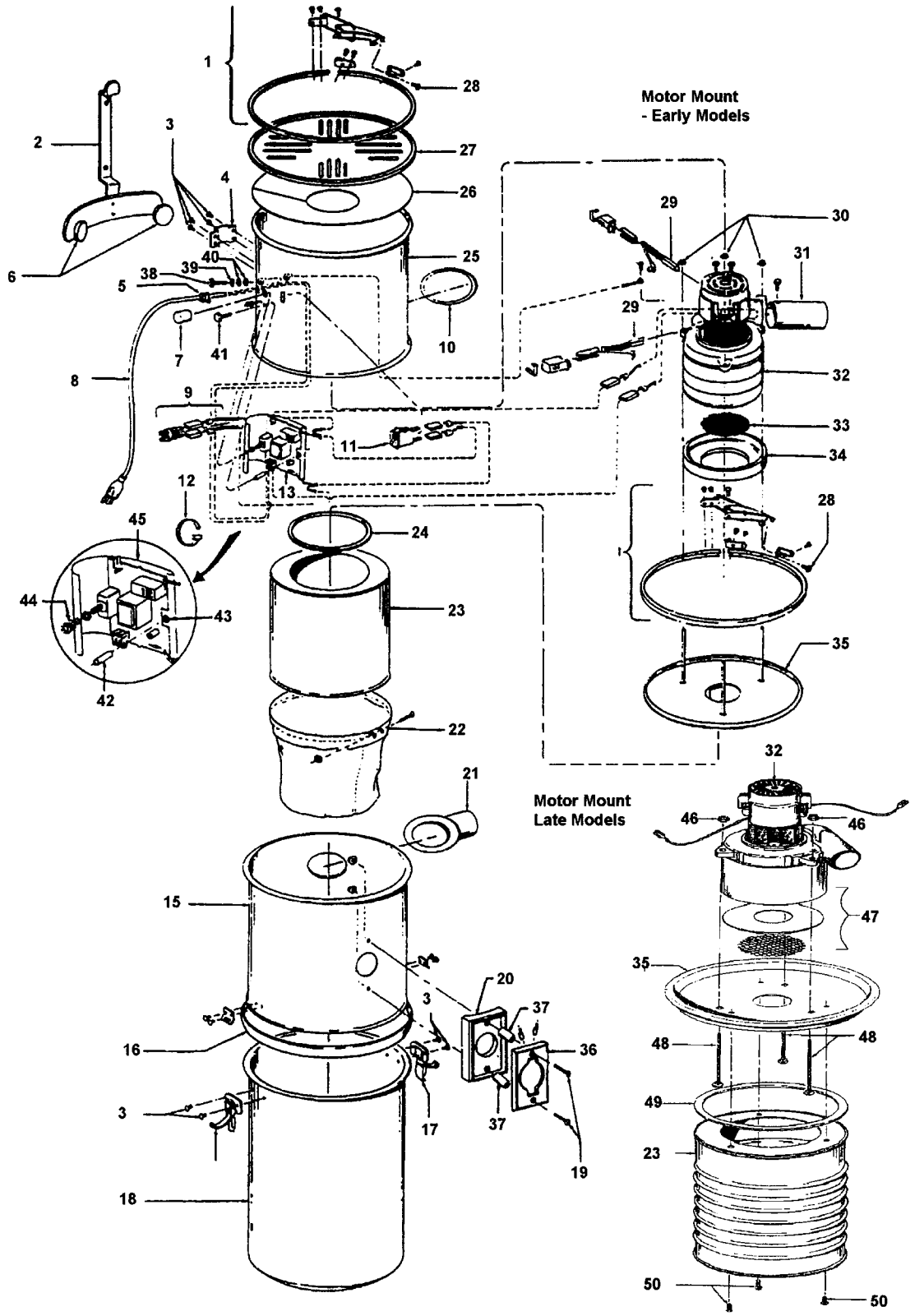
Motor Mount
- Early Models
Motor Mount
Late Models
1
2
3
4
5
6
7
8
9
10
11
12
13
15
16
17
18
19
20
21
22
23
24
25
26
27
28
29
30
31
32
33
34
35
36
37
38
39
40
41
42
43
44
45
46
47
48
49
50

Ref. No.	Part No.		Description
1	41129050		Clamp Ring Assem. - AG (2)
2	41947011		Wall Mount Bracket
3	N/A		Rivet (8)
4	34712003		Bracket
5	39049		Strain Relief
6	31113011	+	Pad (2)
7	23762511		Low Voltage Cap
8	46543025		Cord
9	27724050	+	Terminal Bushing
10	38783013		Grommet
11	28162014		Switch Assem.
12	27479307	*	Wire Tie (2)
13	27135008		Trans/Relay Assem.
15	42213379		Filter Enclosure Assembly - AAM - S5671, S5673 (Early Models)
	42213380		Filter Enclosure Assembly - ABM - S5673 (Late Models)
	42213381		Filter Enclosure Assembly - AG - S5677
16	38784069		Can Gasket
17	23715191		Can Latch (2)
18	43641017		Dust Container Assem. - ABM - S5673 - Late Models
	43641021		Dust Container Assem. - AAM - S5673 - Early Models
	43641016		Dust Container Assem. - AAM - S5671
	43641025		Dust Container Assem. - ADE - S5677
19	21774007	+*	Screw (2)
20	35143001	+	Bezel - AG
21	25435010		Intake Port
22	38763009		Filter
23	38761018	+	Deflector
	43611043		Deflector - S5677
24	38784066		Deflector Gasket
25	42192004		Motor Enclosure Assem. - AAM - S5673 (Early Models)
	42192005		Motor Enclosure Assem. - ABM - S5673 (Late Models)
	42192003		Motor Enclosure Assem. - AAM - S5671 (Early Models)
	42192004		Motor Enclosure Assem. - AAM - S5671 (Late Models)
	42192011		Motor Enclosure Assem. - AG- S5677

Ref. No.	Part No.		Description
26	38763018		Air Baffle - S5671
	38763019	+	Air Baffle - S5673
	38764008	+	Air Baffle - S5677
27	42228007		Top Cover - AAM
	42228010		Top Cover - AG - S5677
28	160508	+*	Self Tapping Screw (2)
29	27292001		Carbon Brush - S5671
	27292002		Carbon Brush - S5673
30	21372203	+	Speed Nut (3)
31	31744024		Exhaust Port
32	43577005		Motor Assembly - S5671
	43577014		Motor Assembly - S5673
	27212047		Motor Assembly - S5677
33	38763005		Motor Screen - early designs
34	38784050		Gasket - Motor - early designs
35	41427036		Motor Filter Mount Assem.(It. 48 req'd)
	37196153		Motor Mount Plate/ Seal Assembly - S5677 (item 48 required)
36	43526014		Inlet Valve
37	31742008		Bezel Spacer (2)
38	N/A		Screw
39	N/A		Lock Washer
40	15854EF	*	Hex Nut (2)
41	21479439	+*	Screw
42	31733006		Spacer
43	37351	+*	Expansion Nut
44	31324001		Spacer
45	34227012	+	PCB. Barrier
46	21854103	*	Nut
47	43543005		Motor Mounting Kit - S5671, S5673
	40309035		Motor Mounting Kit - S5677
48	21831029	+	Carriage Bolt (3)
49	38784066		Seal
50	21447216	+*	Screw

PACKAGING MATERIAL

	58158004	+	Carton - S5671
	58158011		Carton - S5673
	58158027		Carton - S5677
	56513334		Owner Manual
	56513351		Owner Manual - S5677
	58262008	+	Bottom Support
	58248005	+	Corner Support

* The model S5673-080 is a CVS system package which includes the model S5673 Power Unit, the S5697 Power Nozzle Accessory Kit, the S5655 Car Kit, and the S5541 Installation Kit.